Comelit GROUP S.P.A.

SB2V/04B

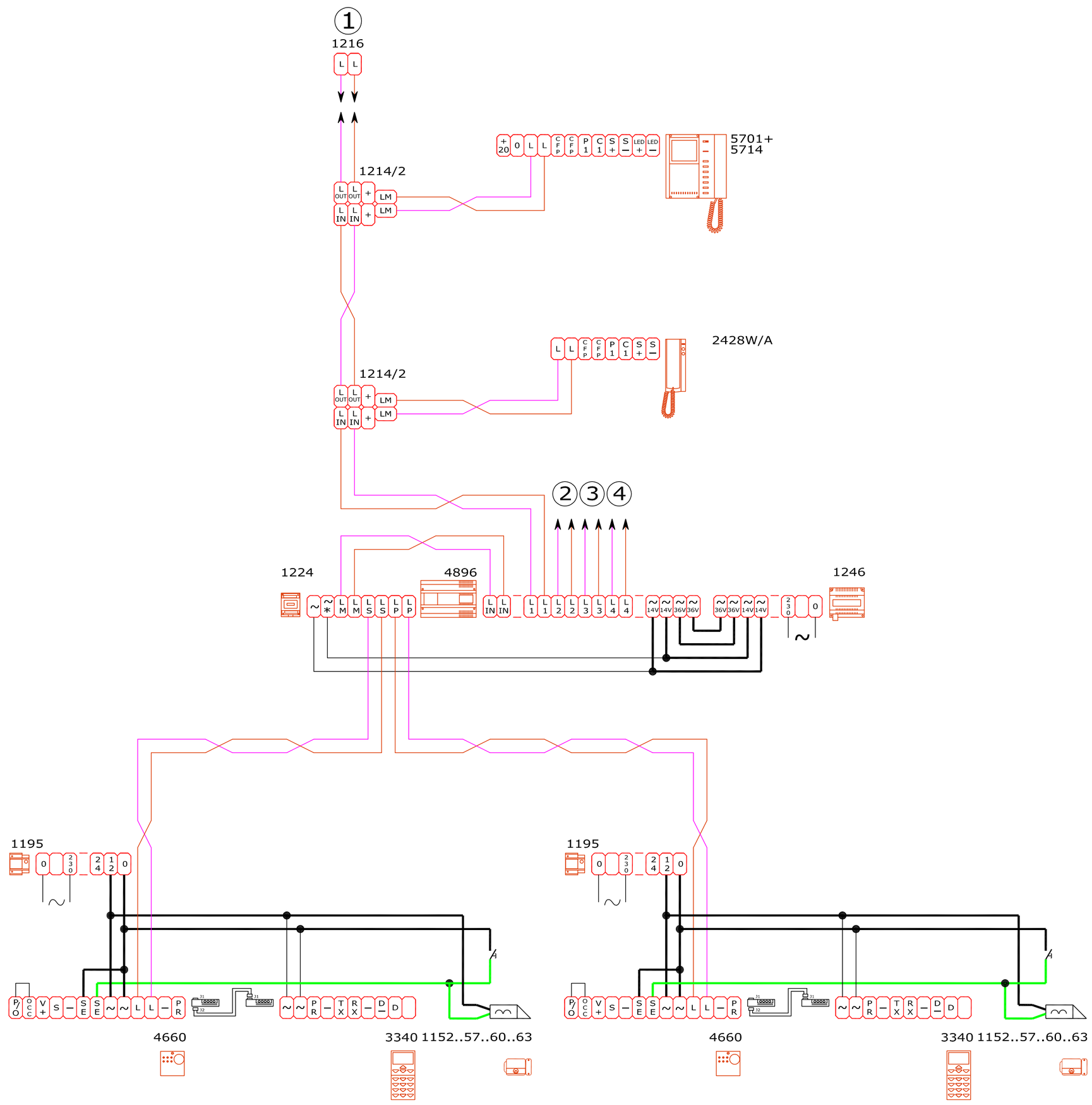

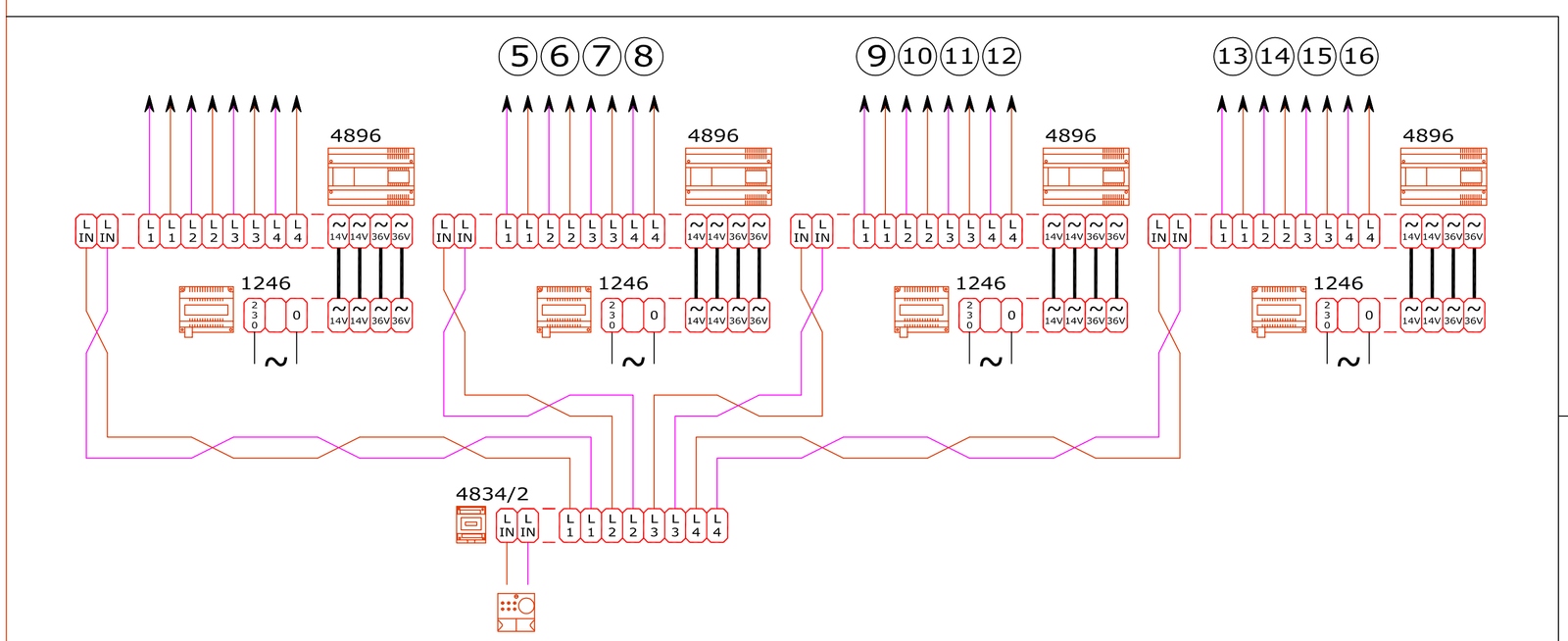

VIDEOCOM

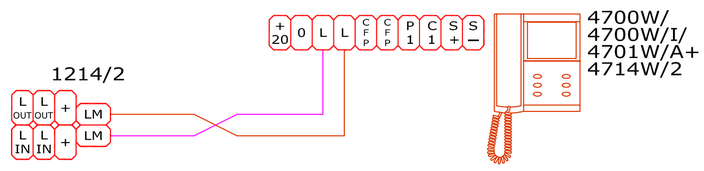

LOGICOM

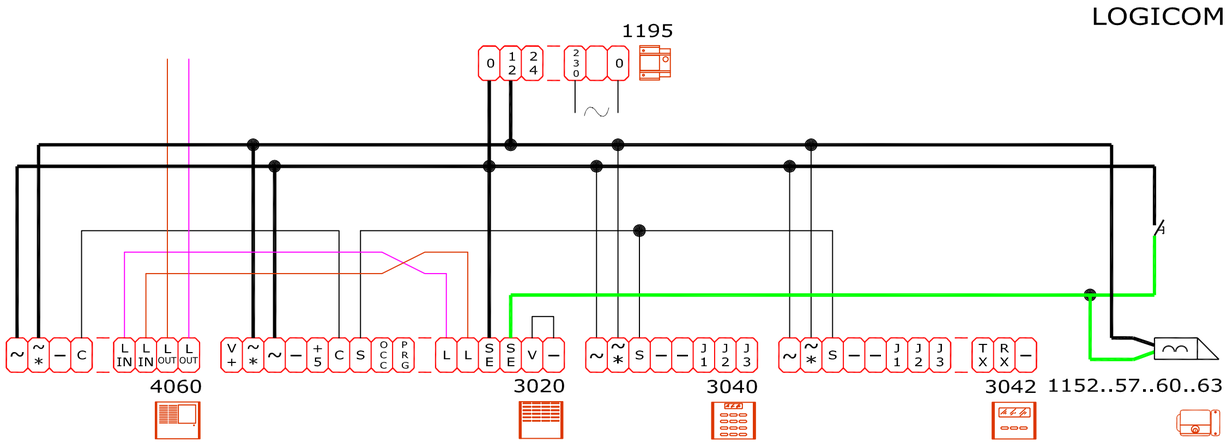
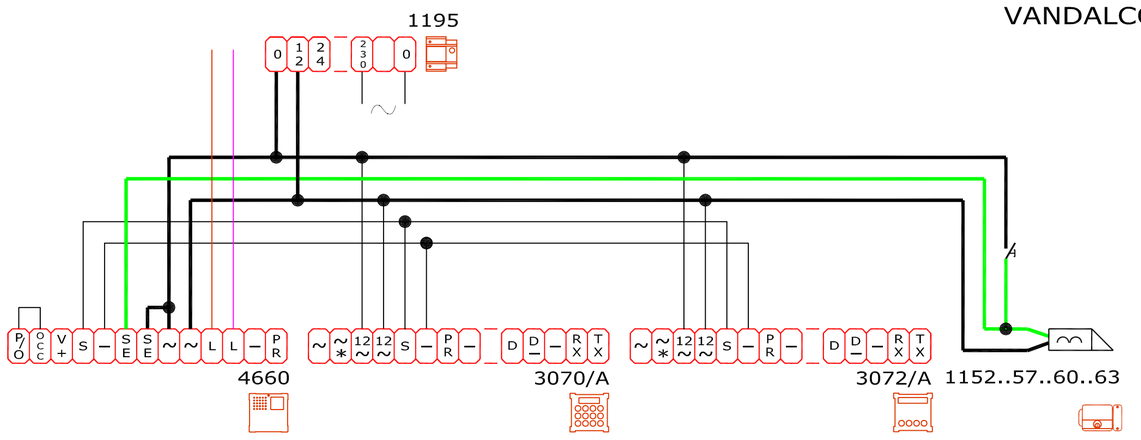
VANDALCOM