Comelit GROUP S.P.A.

SB2V/03B

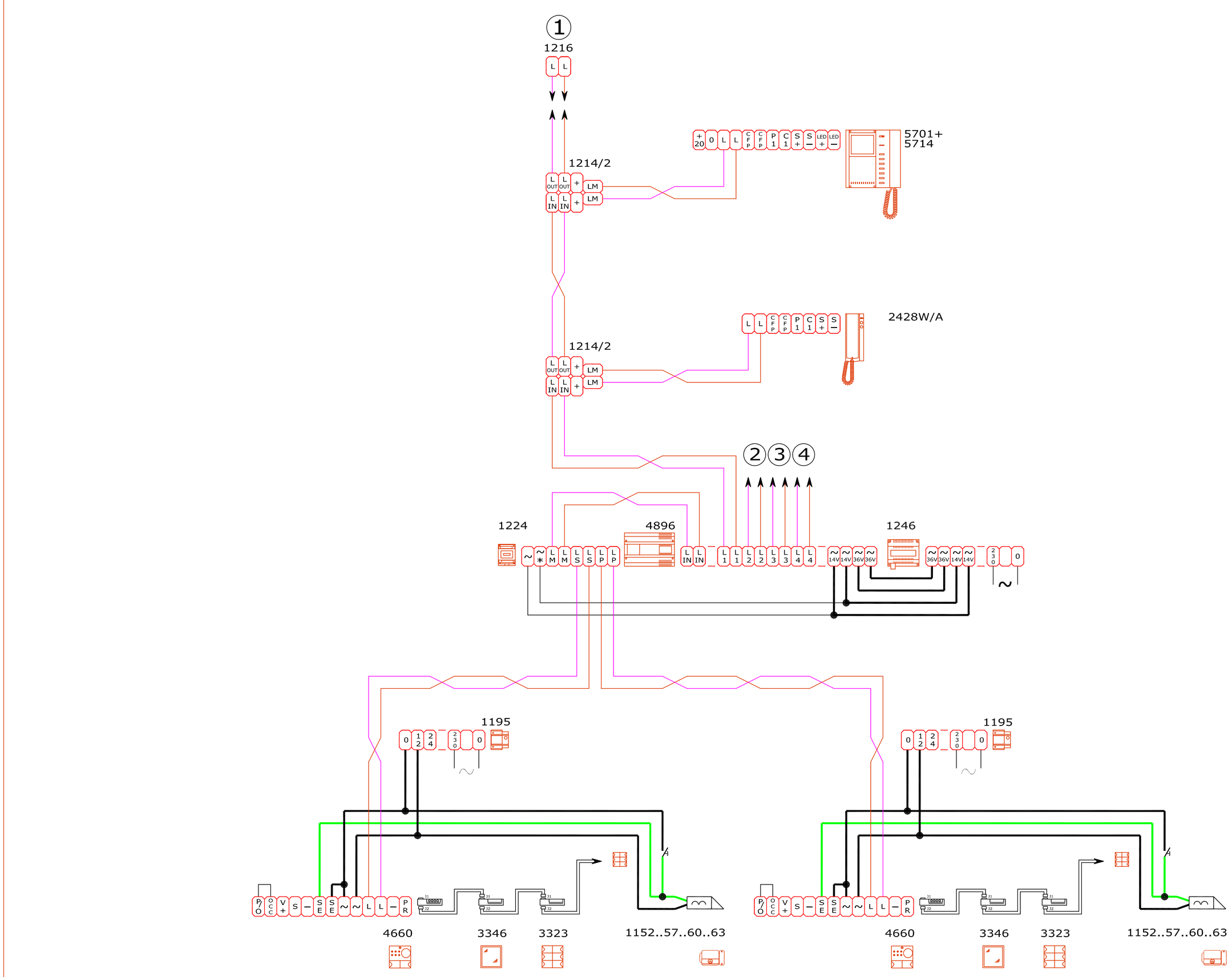

VIDEOCOM

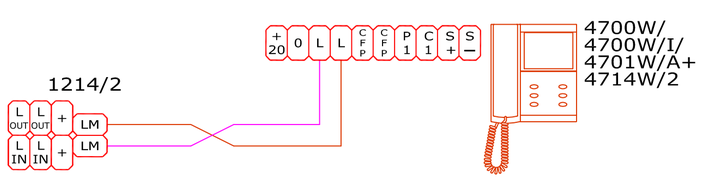

LOGICOM

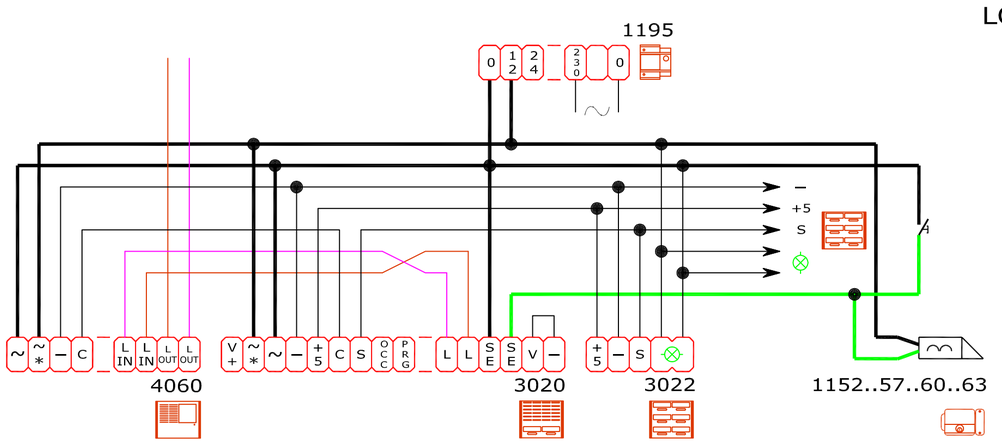

FIRENZE

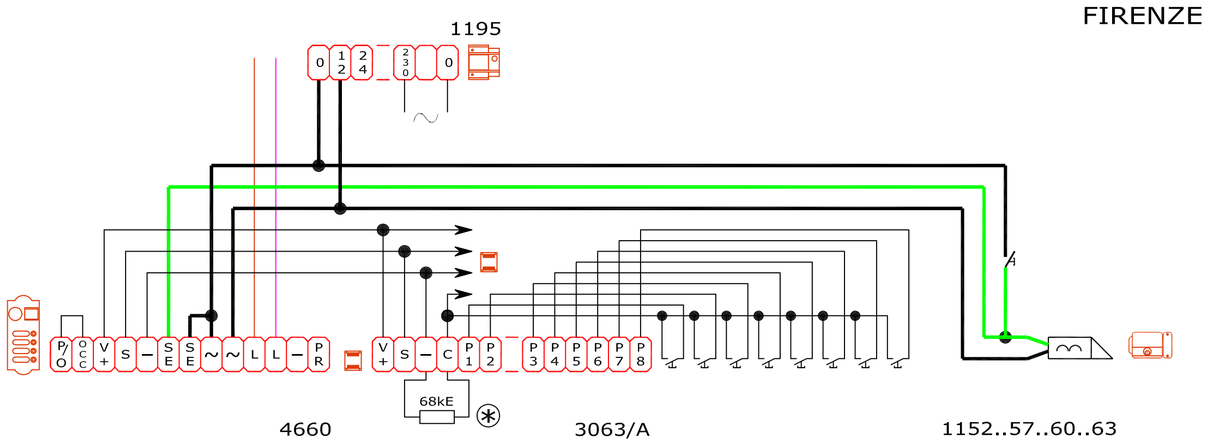

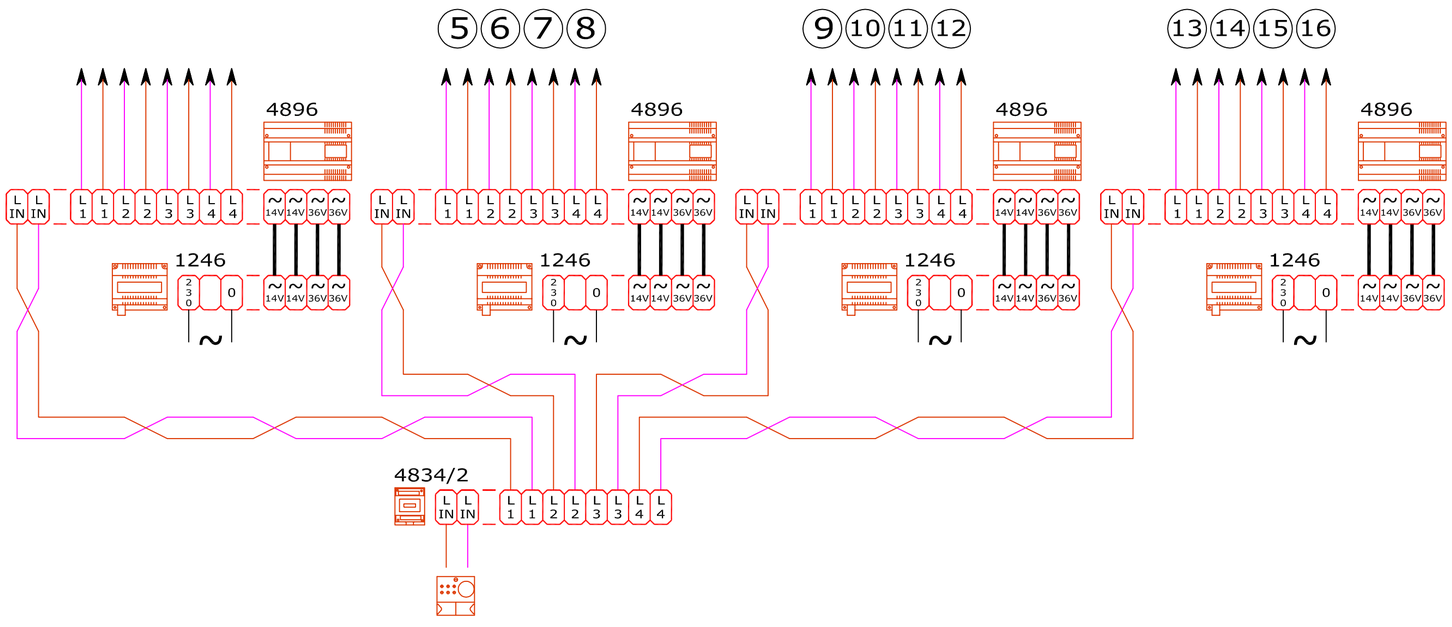
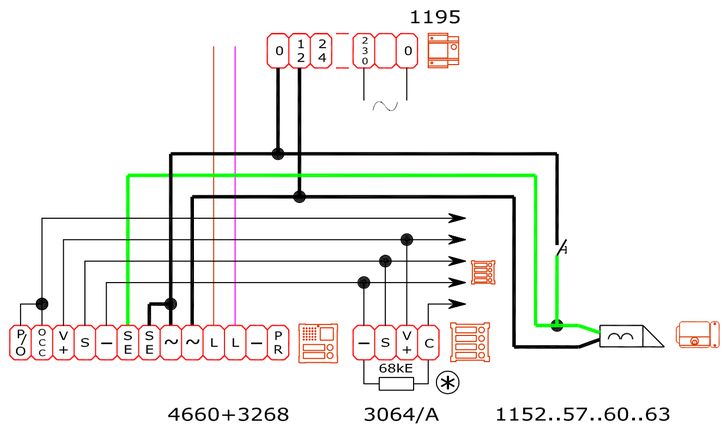
VANDALCOM