Comelit GROUP S.P.A.

SB2V/01BTC

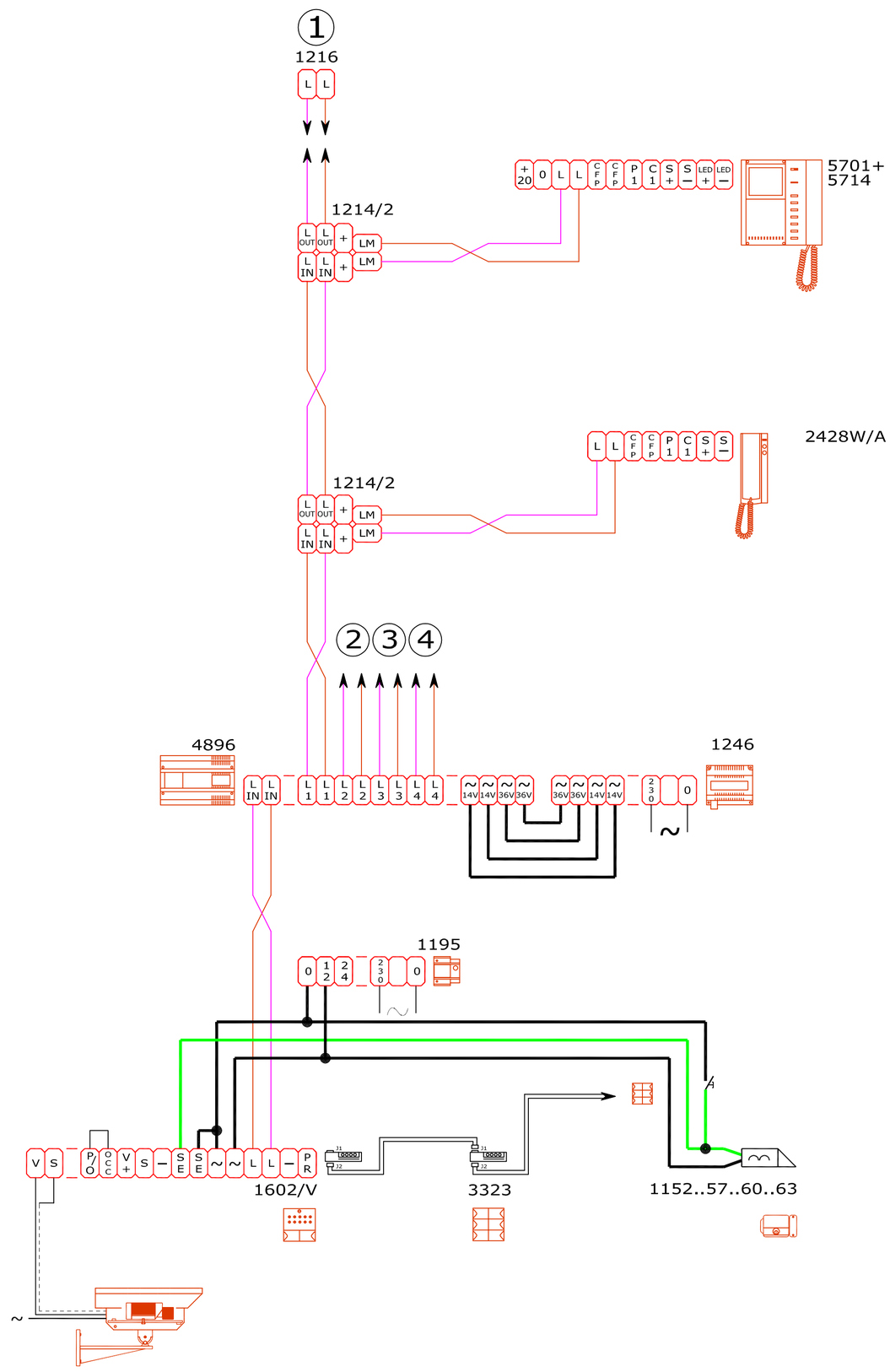

VIDEOCOM

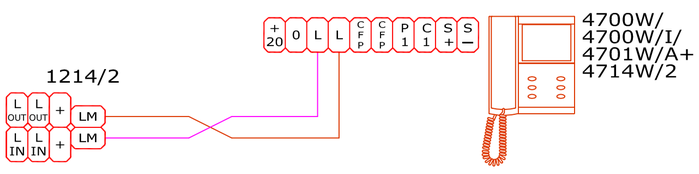

LOGICOM

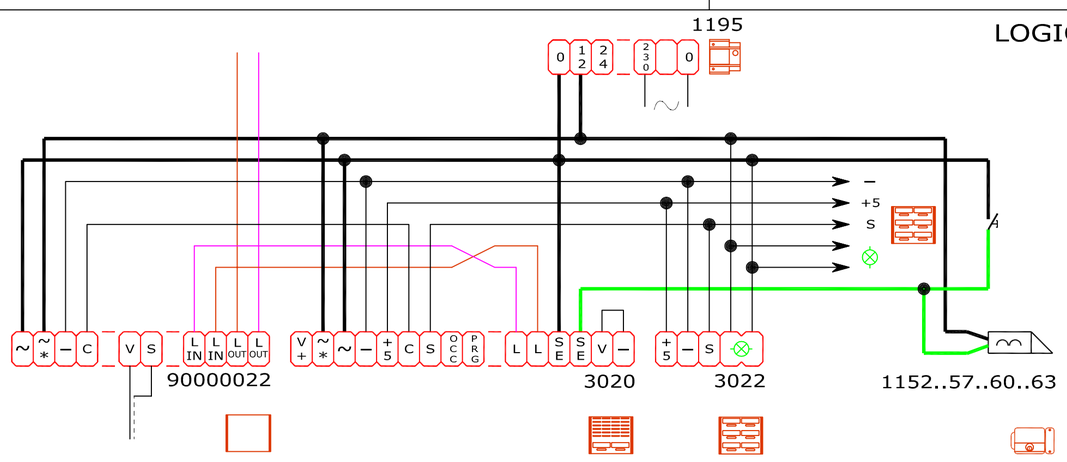

FIRENZE

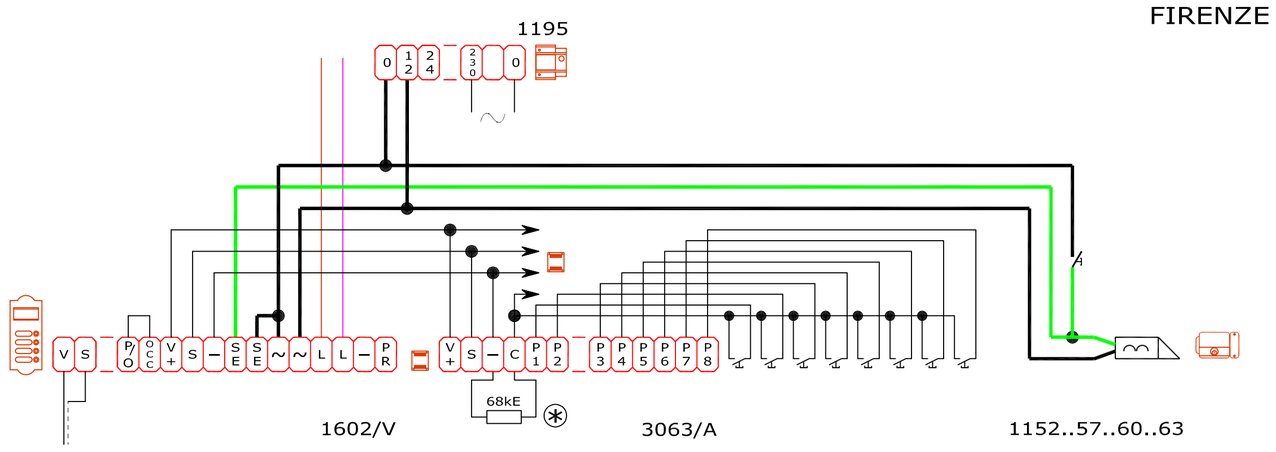

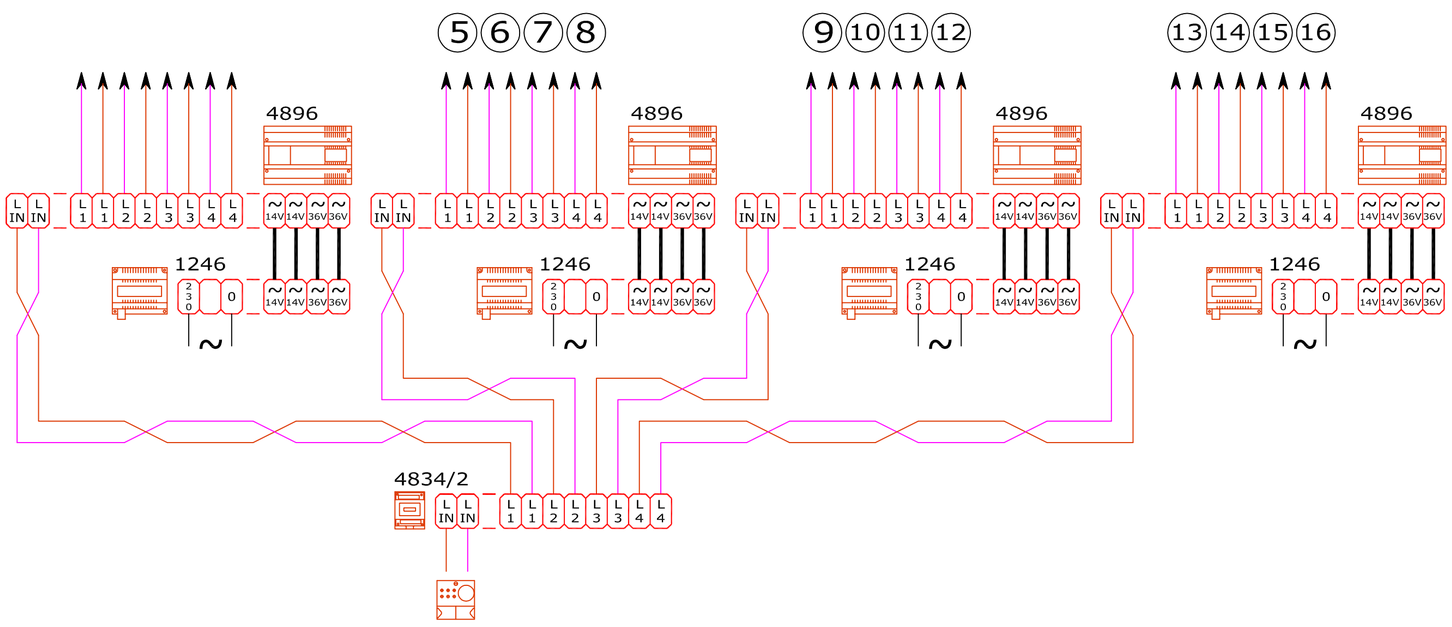
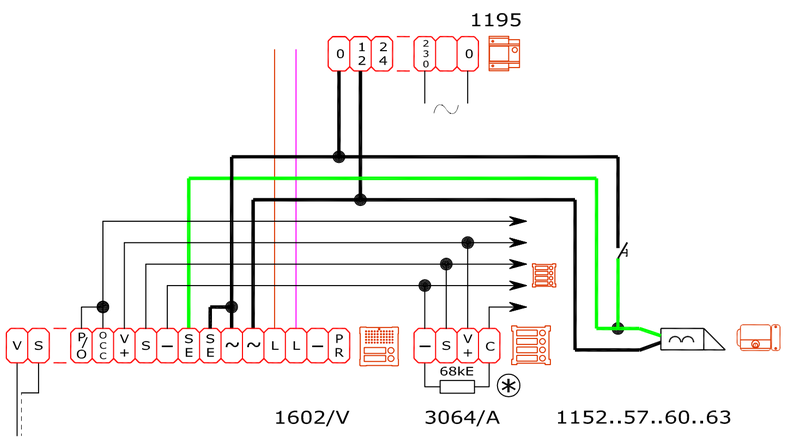
VANDALCOM