Comelit GROUP S.P.A.

SB2V/01B

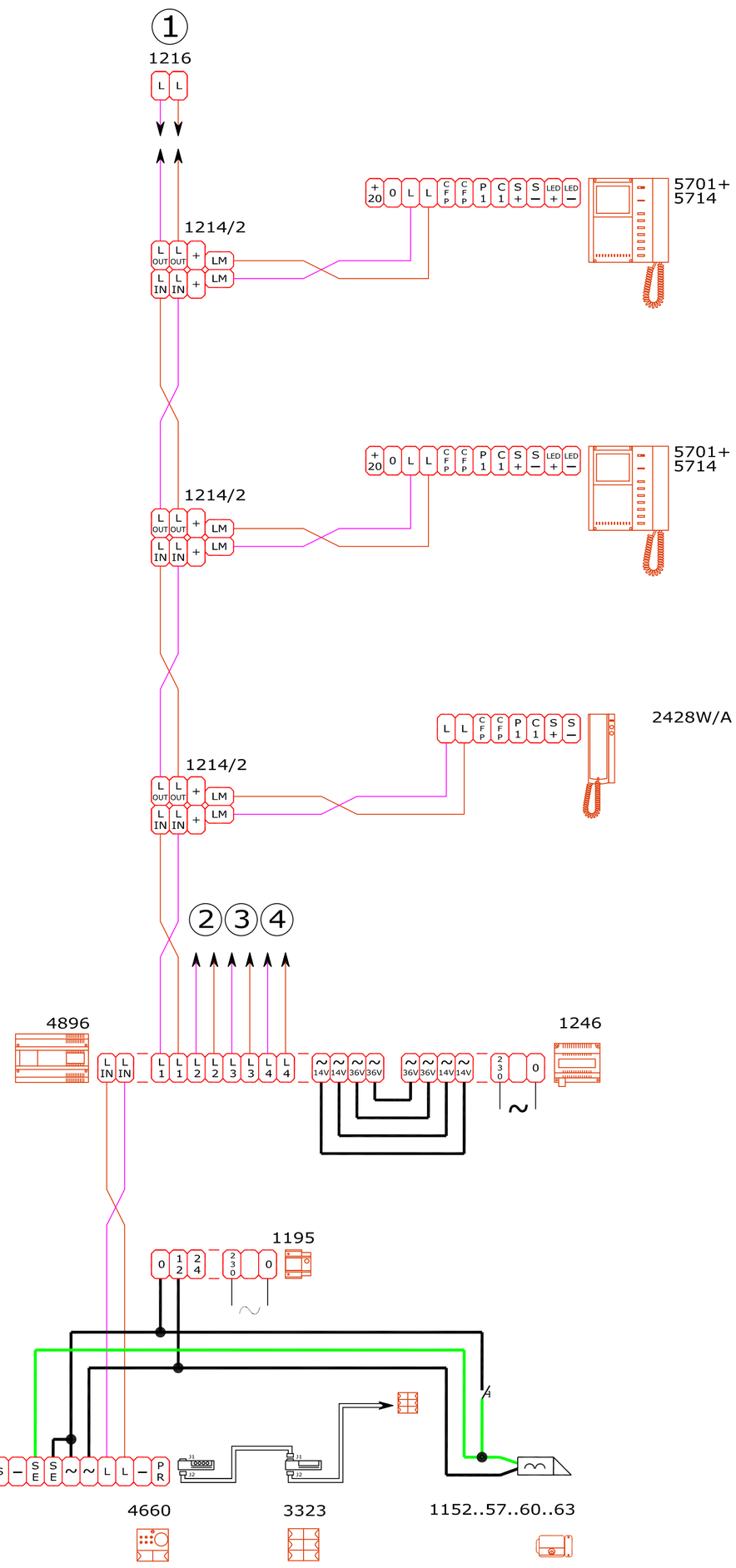

VIDEOCOM

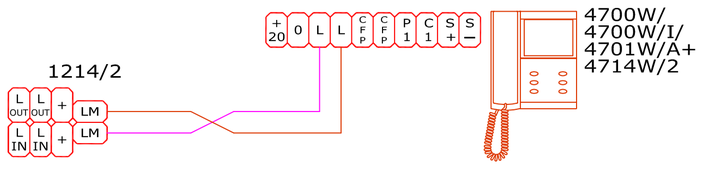

LOGICOM

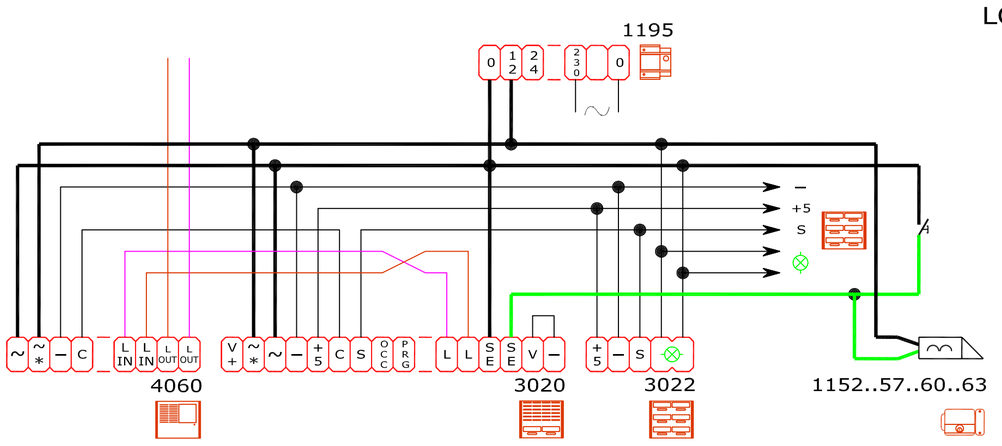

FIRENZE

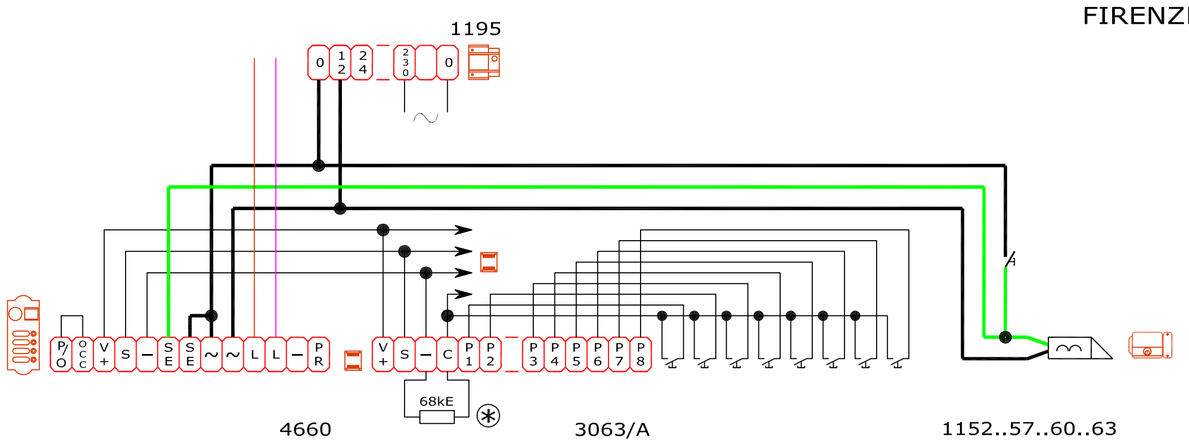

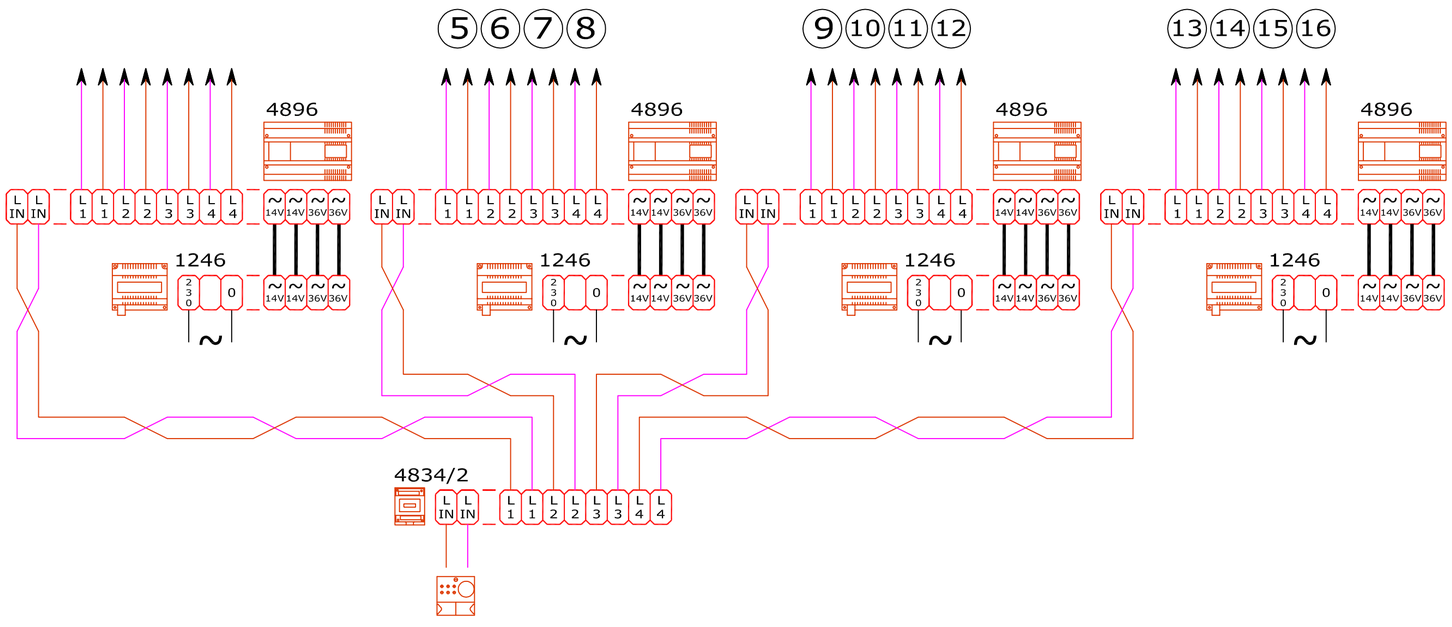
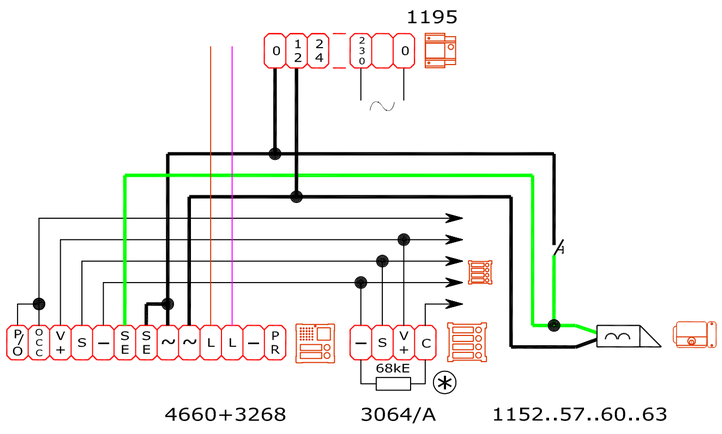
VANDALCOM