Comelit GROUP S.p.A.

SBC/06P

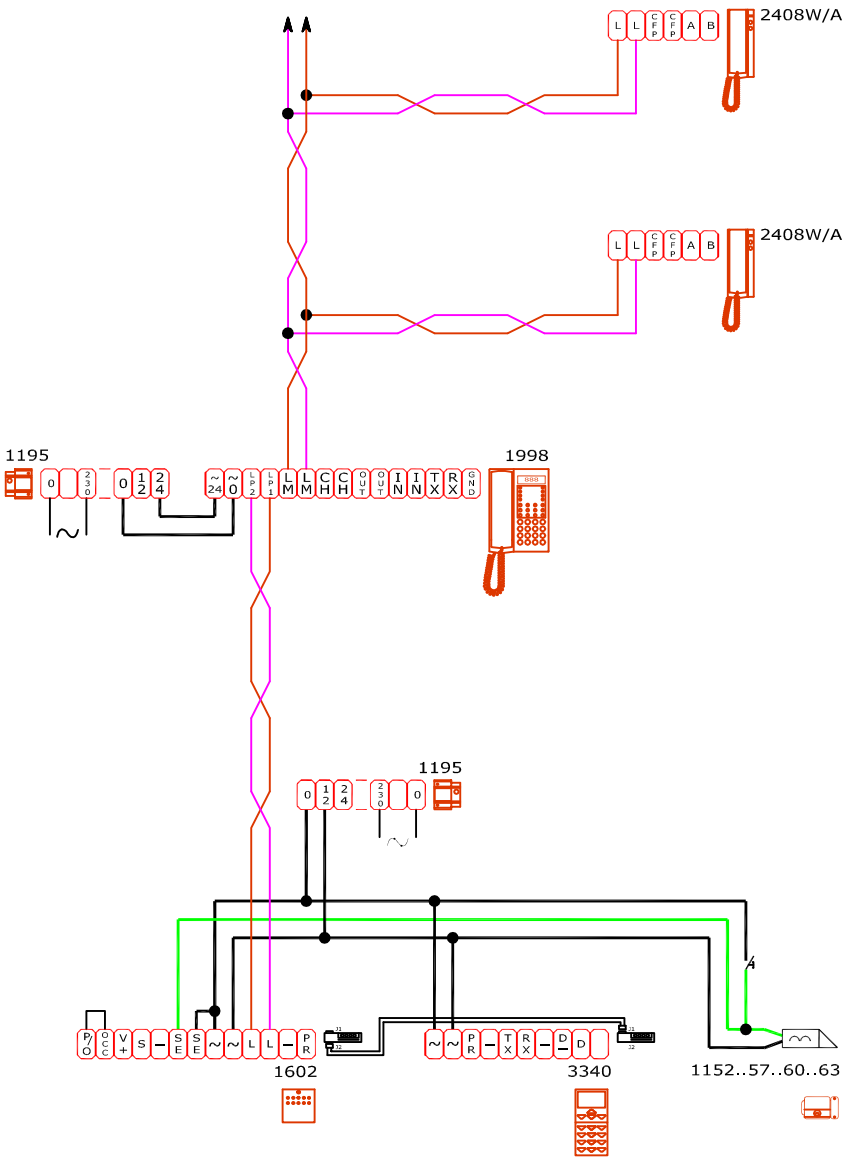

LOGICOM

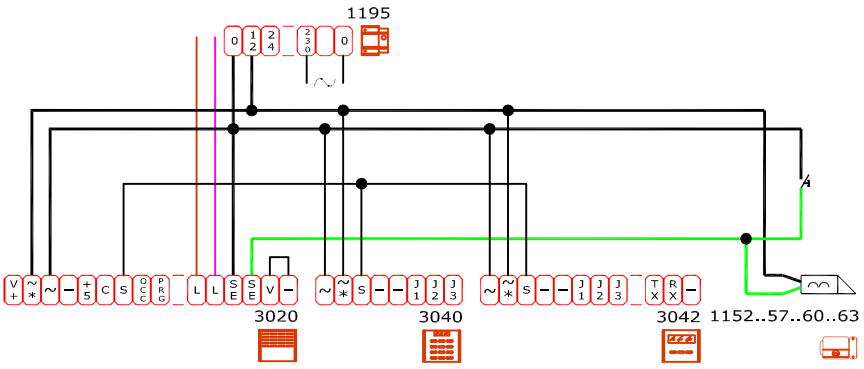
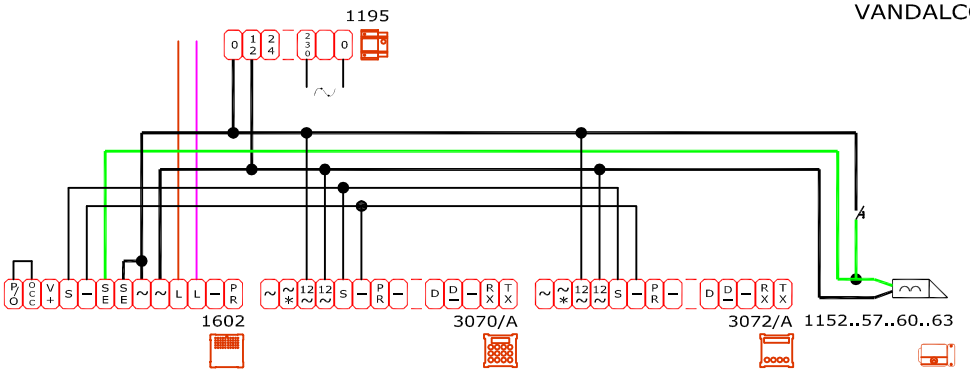
VANDALCOM