Comelit GROUP S.p.A.

SBC/04P

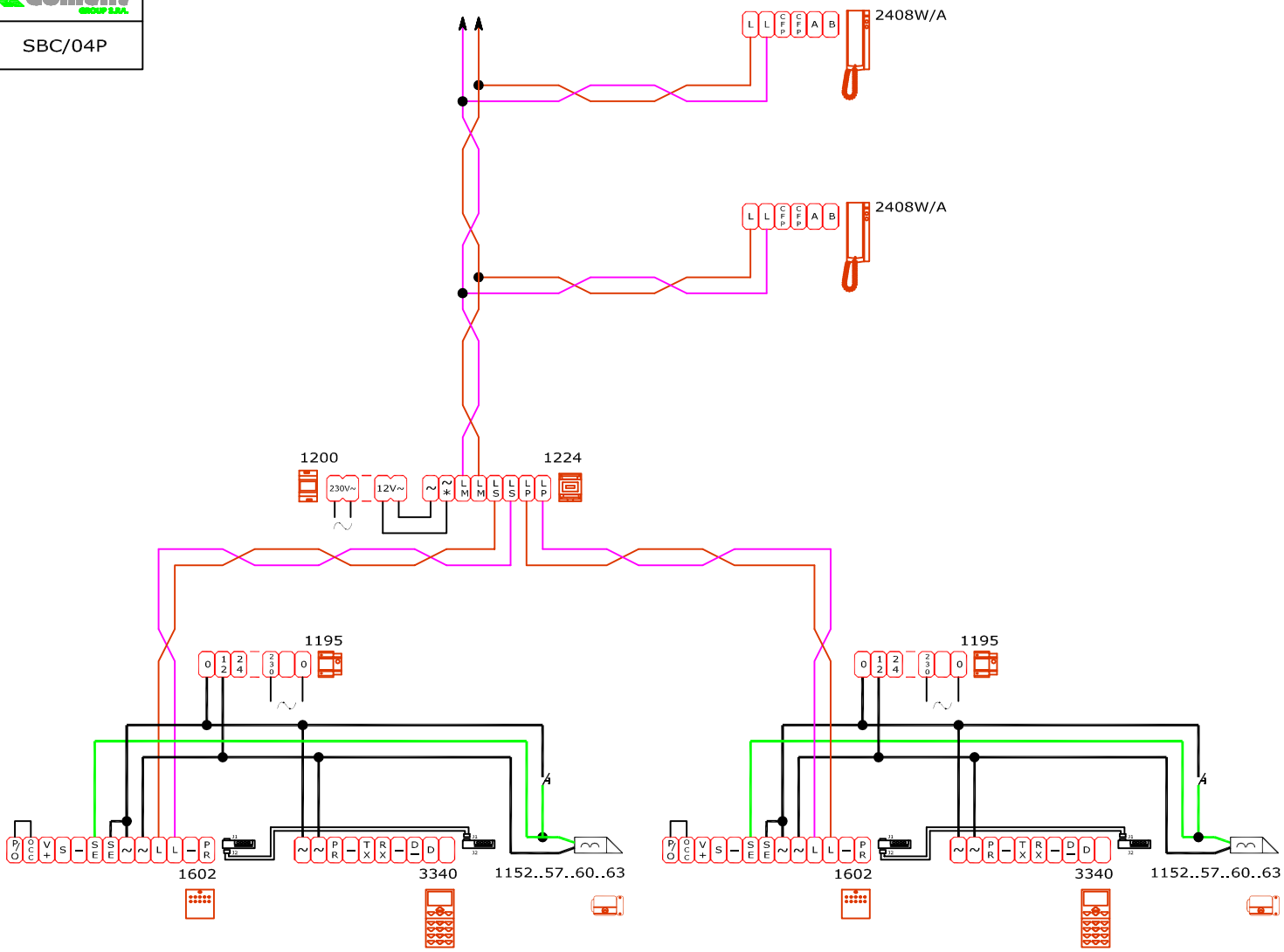

LOGICOM

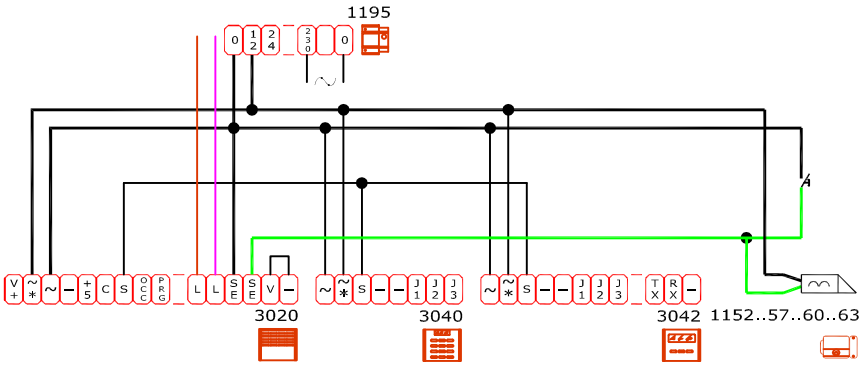
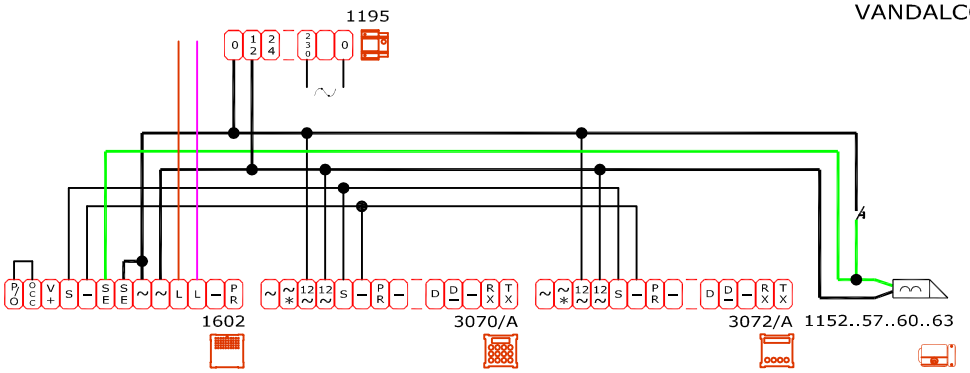
VANDALCOM